MAX6922/MAX6932/ MAX6933/MAX6934

27-, 28-, and 32-Output, 76V, Serial-Interfaced VFD Tube Drivers

General Description

The MAX6922/MAX6932/MAX6933/MAX6934 multi-output, 76V, vacuum-fluorescent display (VFD) tube drivers that interface a VFD tube to a microcontroller or a VFD controller, such as the MAX6850–MAX6853. The MAX6922/MAX6934 have 32 outputs, while the MAX6932 has 27 outputs, and the MAX6933 has 28 outputs. All devices are also suitable for driving telecom relays.

Data is input using standard 4-wire serial interface (CLOCK, DATA, LOAD, BLANK) compatible with other VFD drivers and controllers.

For easy display control, the active-high BLANK input forces all driver outputs low, turning the display off, and automatically puts the IC into shutdown mode. Display intensity may also be controlled by directly pulse-width modulating the BLANK input.

The MAX6922/MAX6932/MAX6934 have a serial interface data output, DOUT, allowing any number of devices to be cascaded on the same serial interface.

The MAX6932/MAX6933/MAX6934 have a negative supply voltage input, V_{SS}, allowing the drivers' output swing to be made bipolar to simplify filament biasing in many applications.

The MAX6922 is available in a 44-pin PLCC package, the MAX6932 and MAX6933 are available in 36-pin SSOP packages, and the MAX6934 is available in 44-pin PLCC and TQFN packages.

Maxim also offers a 12-output VFD driver (MAX6920) and 20-output VFD drivers (MAX6921/MAX6931).

Applications

- White Goods
- Gaming Machines
- Avionics
- Instrumentation
- Industrial Weighing
- Security
- Telecom
- VFD Modules
- Industrial Control

Selector Guide

PART	NO. OF OUTPUTS	BIPOLAR OUTPUT SWING	DOUT FOR CASCADING
MAX6922	32	No	Yes
MAX6932	27	Yes	Yes
MAX6933	28	Yes	No
MAX6934	32	Yes	Yes

Pin Configurations appear at end of data sheet.

Features

- 5MHz Industry-Standard 4-Wire Serial Interface
- 3V to 5.5V Logic Supply Range
- 8V to 76V Grid/Anode Supply Range
- -11V to 0V Filament Bias Supply (MAX6932/MAX6933/MAX6934 Only)
- Push-Pull CMOS High-Voltage Outputs
- Outputs can Source 40mA, Sink 4mA Continuously
- Outputs can Source 75mA Repetitive Pulses
- Outputs can Be Paralleled for Higher Current Drive
- Any Output can Be Used as a Grid or an Anode Driver
- BLANK Input Simplifies PWM Intensity Control
- -40°C to +125°C Temperature Range as Standard

Ordering Information

PART	TEMP RANGE	PIN-PACKAGE
MAX6922AQH	-40°C to +125°C	44 PLCC
MAX6932AAX	-40°C to +125°C	36 SSOP
MAX6933AAX	-40°C to +125°C	36 SSOP
MAX6934AQH	-40°C to +125°C	44 PLCC
MAX6934ATH	-40°C to +125°C	44 TQFN-EP*

**EP = Exposed pad.*

Typical Operating Circuit

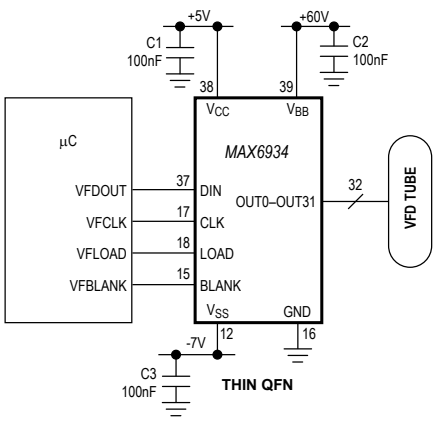

Absolute Maximum Ratings

(Voltage with respect to GND.)

V_{BB} ..... -0.3V to +80V
V_{CC} ..... -0.3V to +6V
V_{SS} (MAX6932/MAX6933/MAX6934 only) ..... -12V to +0.3V
V_{BB} - V_{SS} (MAX6932/MAX6933/MAX6934 only) ... -0.3V to +80V
OUT_ (MAX6922 only) ..... (GND - -0.3V) to (V_{BB} + 0.3V)
OUT_ (MAX6932/MAX6933/MAX6934 only)
..... (V_{SS} - -0.3V) to (V_{BB} + 0.3V)
All Other Pins ..... -0.3V to (V_{CC} + 0.3V)
OUT_ Continuous Source Current ..... -45mA
OUT_ Pulsed (1ms max, 1/4 max duty) Source Current .... -80mA
Total OUT_ Continuous Source Current ..... -840mA
Total OUT_ Continuous Sink Current 140mA
Total OUT_ Pulsed (1ms max, 1/4 max duty)
Source Current ..... -960mA
OUT_ Sink Current 15mA
CLK, DIN, LOAD, BLANK, DOUT Current ..... ±10mA
Continuous Power Dissipation (T_A = +70°C)
36-Pin SSOP (derate 11.8mW/°C
over +70°C) 941mW
44-Pin Thin QFN (derate 27mW/°C
over +70°C) 2165mW
44-Pin PLCC (derate 13.3mW/°C
over +70°C) 1067mW
Operating Temperature Range
(T_{MIN} to T_{MAX}) ..... -40°C to +125°C
Junction Temperature ..... +150°C
Storage Temperature Range ..... -65°C to +150°C
Lead Temperature (soldering, 10s) ..... +300°C

Stresses beyond those listed under "Absolute Maximum Ratings" may cause permanent damage to the device. These are stress ratings only, and functional operation of the device at these or any other conditions beyond those indicated in the operational sections of the specifications is not implied. Exposure to absolute maximum rating conditions for extended periods may affect device reliability.

Electrical Characteristics

(Typical Operating Circuit, V_{BB} = 8V to 76V, V_{CC} = 3V to 5.5V, V_{SS} = -11V to 0V, V_{BB} - V_{SS} ≤ 76V, T_A = T_{MIN} to T_{MAX}, unless otherwise noted.) (Note 1)

PARAMETER	SYMBOL	CONDITIONS		MIN	TYP	MAX	UNITS
Logic Supply Voltage	V_{CC}			3		5.5	V
Tube Supply Voltage	V_{BB}			8		76	V
Bias Supply Voltage (MAX6932/MAX6933/MAX6934 Only)	V_{SS}			-11		0	V
Total Supply Voltage (MAX6932/MAX6933/MAX6934 Only)	V_{BB} - V_{SS}					76	V
Logic Supply Operating Current	I_{CC}	All outputs OUT_ low, CLK = idle	T_A = +25°C		81	105	µA
			T_A = -40°C to +125°C			125	
		All outputs OUT_ high, CLK = idle	T_A = +25°C		813	950	
			T_A = -40°C to +125°C			1000	
Tube Supply Operating Current	I_{BB}	All outputs OUT_ low	T_A = +25°C		2.0	2.5	mA
			T_A = -40°C to +125°C			3	
		All outputs OUT_ high	T_A = +25°C		1.3	1.75	
			T_A = -40°C to +125°C			2.0	
Bias Supply Operating Current (MAX6932/MAX6933/MAX6934 Only)	I_{SS}	All outputs OUT_ low	T_A = +25°C	-1	-0.65		mA
			T_A = -40°C to +125°C	-1.2			
		All outputs OUT_ high	T_A = +25°C	-1.7	-1.5		
			T_A = -40°C to +125°C	-1.8			
High-Voltage OUT_	V_H	V_{BB} ≥ 15V, I_{OUT} = -25mA	T_A = +25°C		V_{BB} - 1.1		V
			T_A = -40°C to +85°C	V_{BB} - 2			
			T_A = -40°C to +125°C	V_{BB} - 2.5			
		V_{BB} ≥ 15V, I_{OUT} = -40mA	T_A = -40°C to +85°C	V_{BB} - 3.5			
			T_A = -40°C to +125°C	V_{BB} - 4.0			
		8V < V_{BB} < 15V, I_{OUT} = -25mA	T_A = +25°C		V_{BB} - 1.2		
			T_A = -40°C to +85°C	V_{BB} - 2.5			
			T_A = -40°C to +125°C	V_{BB} - 3.0			

Electrical Characteristics (continued)

(Typical Operating Circuit, V_{BB} = 8V to 76V, V_{CC} = 3V to 5.5V, V_{SS} = -11V to 0V, V_{BB} - V_{SS} ≤ 76V, T_A = T_{MIN} to T_{MAX}, unless otherwise noted.) (Note 1)

PARAMETER	SYMBOL	CONDITIONS		MIN	TYP	MAX	UNITS
Low-Voltage OUT_ (MAX6932 Only)	V_L	V_{BB} ≥ 15V, I_{OUT} = 1mA	T_A = +25°C		0.75	1.2	V
			T_A = -40°C to +85°C			1.5	
			T_A = -40°C to +125°C			2.1	
		8V < V_{BB} < 15V, I_{OUT} = 1mA	T_A = +25°C		0.8	1.3	
			T_A = -40°C to +85°C			1.7	
			T_A = -40°C to +125°C			2.2	
Low-Voltage OUT_ (MAX6932/MAX6933/MAX6934 Only)	V_L	V_{BB} ≥ 15V, I_{OUT} = 1mA	T_A = +25°C		V_{SS} + 0.75	V_{SS} + 1.2	V
			T_A = -40°C to +85°C			V_{SS} + 1.5	
			T_A = -40°C to +125°C			V_{SS} + 2.1	
		8V < V_{BB} < 15V, I_{OUT} = 1mA	T_A = +25°C		V_{SS} + 0.8	V_{SS} + 1.3	
			T_A = -40°C to +85°C			V_{SS} + 1.7	
			T_A = -40°C to +125°C			V_{SS} + 2.2	
Rise Time OUT_ (20% to 80%)	t_R	V_{BB} = 60V, C_L = 50pF, R_L = 2.3kΩ			0.9	2.5	µs
Fall Time OUT_ (80% to 20%)	t_F	V_{BB} = 60V, C_L = 50pF, R_L = 2.3kΩ			0.6	1.5	µs
SERIAL INTERFACE TIMING CHARACTERISTICS							
LOAD Rising to OUT_ Falling Delay		(Notes 2, 3)			0.9	3	µs
LOAD Rising to OUT_ Rising Delay		(Notes 2, 3)			1.2	3	µs
BLANK Rising to OUT_ Falling Delay		(Notes 2, 3)			0.9	3	µs
BLANK Falling to OUT_ Rising Delay		(Notes 2, 3)			1.3	3	µs
Input Leakage Current CLK, DIN, LOAD, BLANK	I_{IH}, I_{IL}				0.05	10	µA
Logic-High Input Voltage CLK, DIN, LOAD, BLANK	V_{IH}			0.8 x V_{CC}			V
Logic-Low Input Voltage CLK, DIN, LOAD, BLANK	V_{IL}					0.3 x V_{CC}	V
Hysteresis Voltage DIN, CLK, LOAD, BLANK	ΔV_I				0.6		V
High-Voltage DOUT	V_{OH}	I_{SOURCE} = -1.0mA		V_{CC} - 0.5			V
Low-Voltage DOUT	V_{OL}	I_{SINK} = 1.0mA				0.5	V

Electrical Characteristics (continued)

(Typical Operating Circuit, V_{BB} = 8V to 76V, V_{CC} = 3V to 5.5V, V_{SS} = -11V to 0V, V_{BB} - V_{SS} ≤ 76V, T_A = T_{MIN} to T_{MAX}, unless otherwise noted.) (Note 1)

PARAMETER	SYMBOL	CONDITIONS		MIN	TYP	MAX	UNITS
Rise and Fall Time DOUT		C_{DOUT} = 10pF (Note 2)	3V to 4.5V		80	130	ns
			4.5V to 5.5V		50	80	
CLK Clock Period	t_{CP}			200			ns
CLK Pulse-Width High	t_{CH}			90			ns
CLK Pulse-Width Low	t_{CL}			90			ns
CLK Rise to LOAD Rise Hold	t_{CSH}	(Note 2)		100			ns
DIN Setup Time	t_{DS}			5			ns
DIN Hold Time	t_{DH}	3.0V to 4.5V		20			ns
		4.5V to 5.5V		15			
DOUT Propagation Delay	t_{DO}	C_{DOUT} = 10pF	3.0V to 4.5V	25	120	240	ns
			4.5V to 5.5V	20	75	150	
LOAD Pulse High	t_{CSW}			60			ns

Note 1: All parameters are tested at T_A = +25°C. Specifications over temperature are guaranteed by design.
Note 2: Guaranteed by design.
Note 3: Delay measured from control edge to when output OUT_ changes by 1V.

Typical Operating Characteristics

(V_{CC} = 5.0V, V_{BB} = 76V, and T_A = +25°C, unless otherwise noted.)

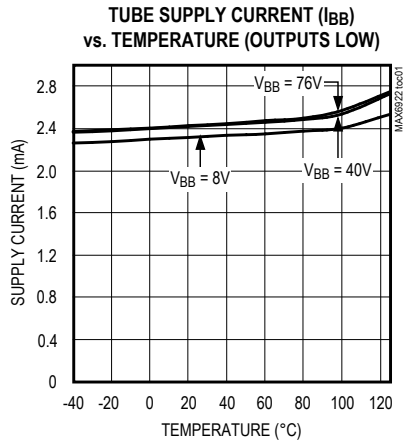

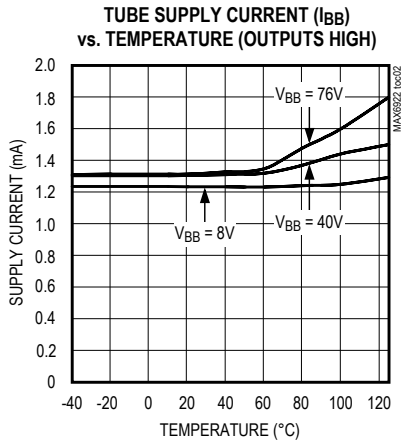

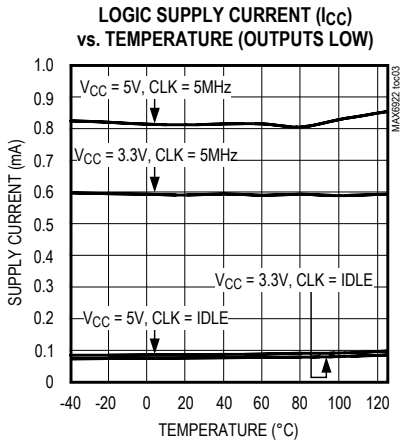

Typical Operating Characteristics (continued)

(V_{CC} = 5.0V, V_{BB} = 76V, and T_A = +25°C, unless otherwise noted.)

LOGIC SUPPLY CURRENT (I_{CC}) vs. TEMPERATURE (OUTPUTS HIGH)

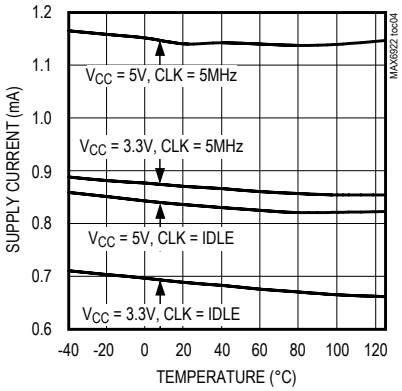

OUTPUT VOLTAGE vs. TEMPERATURE (OUTPUTS LOW)

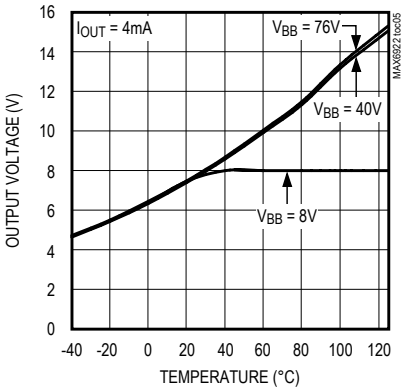

OUTPUT VOLTAGE (V_{BB} - V_T) vs. TEMPERATURE (OUTPUTS HIGH)

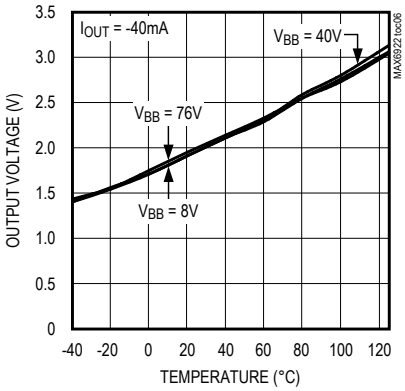

OUTPUT FALL AND RISE TIME

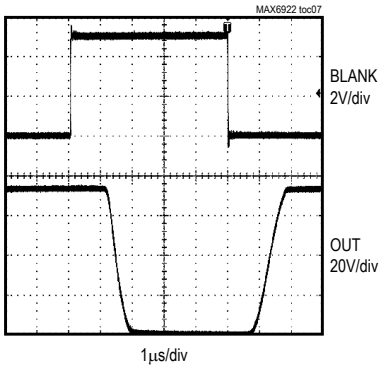

Pin Description

PIN			NAME	FUNCTION
MAX6922/ MAX6934 PLCC	MAX6932/ MAX6933 SSOP	MAX6934 TQFN		
1	1	39	V_{BB}	VFD Supply Voltage
2	2	40	DOUT (MAX6932)	Serial-Data Output. Data is clocked out of the internal shift register to DOUT on CLK's falling edge. For the MAX6933 only—VFD anode and grid driver.
	2		(OUT27) (MAX6933)	(OUT27 is a push-pull output swinging from V_{BB} to V_{SS}.)
3, 4, 5, 7–17, 19, 20, 25, 26, 27, 30–42	—	1–11, 13, 14, 19, 20, 21, 24–36, 41, 42, 43	OUT0 to OUT31	VFD Anode and Grid Drivers. OUT_ are push-pull outputs swinging from V_{BB} to GND for the MAX6922 and from V_{BB} to V_{SS} for the MAX6934.
—	3 –13, 15, 16, 21–34	—	OUT0 to OUT26	VFD Anode and Grid Drivers. OUT_ are push-pull outputs swinging from V_{BB} to V_{SS}.
6, 28, 29	—	22, 23, 44	N.C.	No Connection. Not internally connected.
18	—	—	N.C. (V_{SS})	For the MAX6922—No Connection. Not internally connected. For the MAX6934—bias supply voltage.
—	14	12	V_{SS}	Bias Supply Voltage
21	17	15	BLANK	Blanking Input. High forces outputs OUT_ low without altering the contents of the output latches. Low enables outputs OUT_ to follow the state of the output latches.
22	18	16	GND	Ground
23	19	17	CLK	Serial-Clock Input. Data is loaded into the internal shift register on CLK's rising edge. On CLK's falling edge, data is clocked out of DOUT.
24	20	18	LOAD	Load Input. Data is loaded transparently from the internal shift register to the output latch while LOAD is high. Data is latched into the output latch on LOAD's rising edge, and retained while LOAD is low.
43	35	37	DIN	Serial-Data Input. Data is loaded into the internal shift register on CLK's rising edge.
44	36	38	V_{CC}	Logic Supply Voltage
—	—	EP	EP	Exposed Pad. Connect to a large ground plane to maximize thermal performance.

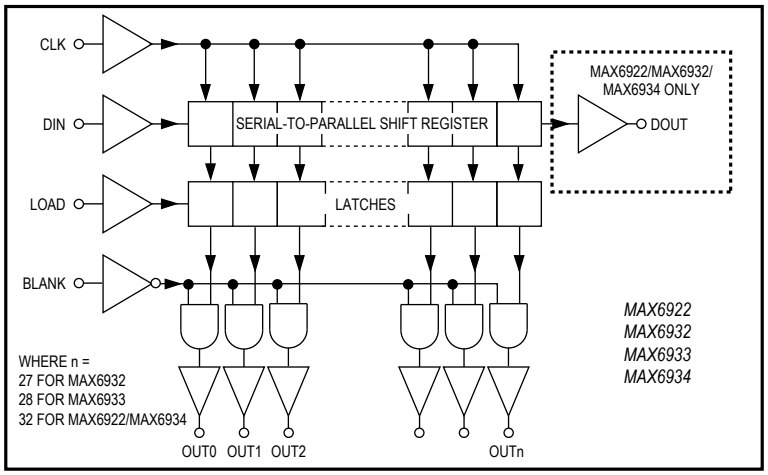

Figure 1. MAX6922/MAX6932/MAX6933/MAX6934 Functional Diagram

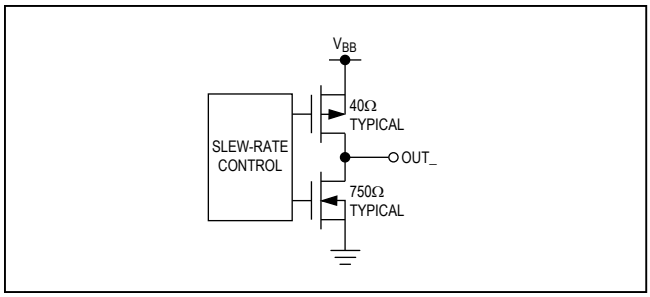

Figure 2. MAX6922 CMOS Output Driver Structure

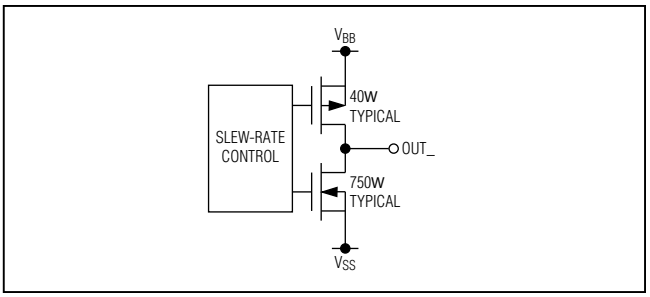

Figure 3. MAX6932/MAX6933/MAX6934 CMOS Output Driver Structure

Detailed Description

The MAX6922/MAX6932/MAX6933/MAX6934 are VFD tube drivers comprising a 4-wire serial interface driving high-voltage rail-to-rail output ports. The driver is suitable for both static and multiplexed displays.

The output ports feature high current-sourcing capability to drive current into grids and anodes of static or multiplex VFDs. The ports also have active current sinking for fast discharge of capacitive display electrodes in multiplexing applications.

The 4-wire serial interface comprises a shift register and transparent latch with 32 bits for the MAX6922/MAX6934, 28 bits for the MAX6933, and 27 bits for the MAX6932. The shift register is written through a clock input CLK and a data input DIN. For the MAX6922/MAX6932/MAX6934, the data propagates to a data output DOUT. The data output allows multiple drivers to be cascaded and operated together. The output latch is transparent to the shift register outputs when LOAD is high, and latches the current state on the falling edge of LOAD.

Each driver output is a slew-rate controlled CMOS push-pull switch driving between V_{BB} and GND (MAX6922) or V_{BB} and V_{SS} (MAX6932/MAX6933/ MAX6934). The output rise time is always slower than the output fall time to avoid shoot-through currents during output transitions. The output slew rates are slow enough to minimize EMI, yet are fast enough so as not to impact the typical 100µs digit multiplex period and affect the display intensity.

Initial Power-Up and Operation

An internal reset circuit clears the internal registers on power-up. All outputs and the interface output DOUT (MAX6922/MAX6932/MAX6934 only) initialize low regardless of the initial logic levels of the CLK, DIN, BLANK, and LOAD inputs.

4-Wire Serial Interface

These driver ICs use a 4-wire serial interface with three inputs (DIN, CLK, LOAD) and a data output (DOUT, MAX6922/MAX6932/MAX6934 only). This interface is used to write data to the ICs (Figure 4) (Table 1). The serial interface data word length is 32 bits for the MAX6922/MAX6934, 27 bits for the MAX6932, and 28 bits for the MAX6933.

The functions of the four serial interface pins are:

- CLK input is the interface clock, which shifts data into the shift register on its rising edge.
- LOAD input passes data from the shift register to the output latch when LOAD is high (transparent latch), and latches the data on LOAD's falling edge.
- DIN is the interface data input, and must be stable when it is sampled on the rising edge of CLK.
- DOUT is the interface data output, which shifts data out from the shift register on the rising edge of CLK. Data at DIN is propagated through the shift register and appears at DOUT (n CLK cycles + t_{DO}) later, where n is the number of drivers in the IC.

A fifth input, BLANK, can be taken high to force the outputs low, without altering the contents of the output latches. When the BLANK input is low, the outputs follow the state of the output latches. A common use of the BLANK input is PWM intensity control.

The BLANK input's function is independent of the operation of the serial interface. Data can be shifted into the serial interface shift register and latched regardless of the state of BLANK.

Writing Device Registers Using the 4-Wire Serial Interface

The MAX6922/MAX6932/MAX6933/MAX6934 are normally written using the following sequence:

1) Take CLK low.
2) Clock n bits of data in order D_{n-1} first to D0 last into DIN, observing the data setup and hold times.
3) Load the n output latches with a falling edge on LOAD, where n is 27 for the MAX6932, 28 for the MAX6933, and 32 for the MAX6922 and MAX6934.

LOAD may be high or low during a transmission. If LOAD is high, then the data shifted into the shift register at DIN appears at the OUT0 to OUT_{n-1} outputs.

CLK and DIN may be used to transmit data to other peripherals. Activity on CLK always shifts data into the shift register. However, the output latches only update on the rising edge of LOAD, and the last n bits of data

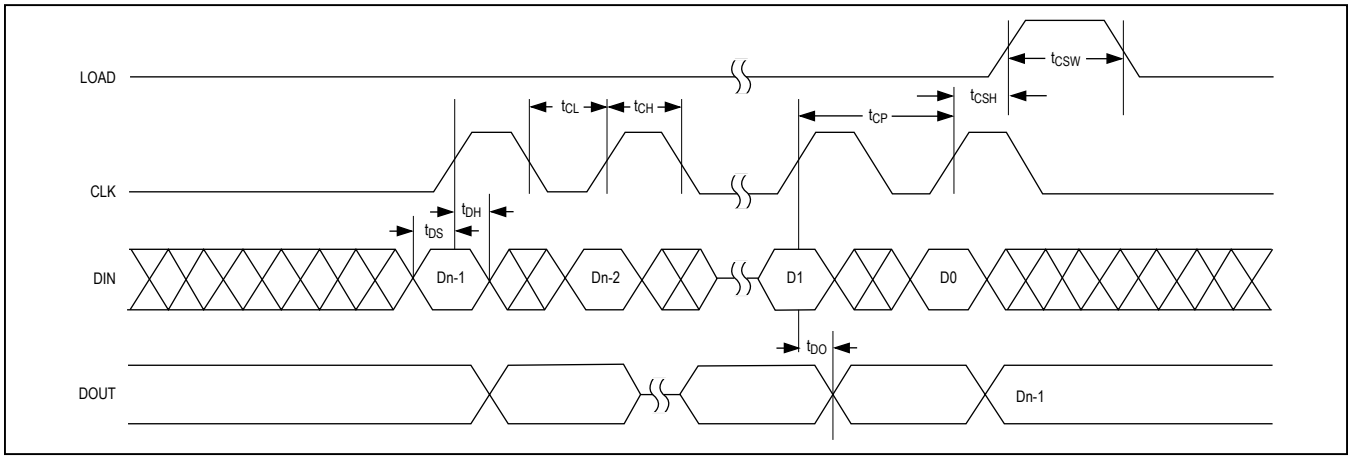

Figure 4. 4-Wire Serial Interface Timing Diagram

Table 1. 4-Wire Serial Interface Truth Table

SERIAL DATA INPUT DIN	CLOCK INPUT	SHIFT REGISTER CONTENTS						LOAD INPUT	LATCH CONTENTS						BLANKING INPUT	OUTPUT CONTENTS					
	CLK	D0	D1	D2	…	Dn-2	Dn-1	LOAD	D0	D1	D2	…	Dn-2	Dn-1	BLANK	D0	D1	D2	…	Dn-2	Dn-1
H	↗	H	R0	R1	…	Rn-2	Rn-1														
L	↗	L	R0	R1	…	Rn-2	Rn-1														
X	↗	R0	R1	R2	…	Rn-1	Rn														
		X	X	X	…	X	X	L	R0	R1	R2	…	Rn-1	Rn							
		P0	P1	P2	…	Pn-1	Pn	H	P0	P1	P2	…	Pn-1	Pn	L	P0	P1	P2	…	Pn-1	Pn
									X	X	X	…	X	X	H	L	L	L	…	L	L

L = Low logic level.
H = High logic level.
X = Don't care.
P = Present state (shift register).
R = Previous state (latched).

clocked in are loaded. Therefore, multiple devices can share CLK and DIN, as long as they have unique LOAD controls.

Determining Driver Output Voltage Drop

The outputs are CMOS drivers, and have a resistive characteristic. The typical and maximum sink and source output resistances can be calculated from the V_H and V_L electrical characteristics. Use this calculated resistance to determine the output voltage drop at different output currents.

Output Current Ratings

The continuous current-source capability is 40mA per output. Outputs may drive up to 75mA as a repetitive peak current, subject to the on-time (output high) being no longer than 1ms, and the duty cycle being such that the output power dissipation is no more than the dissipation for the continuous case. The repetitive peak rating allows outputs to drive a higher current in multiplex grid driver applications, where only one grid is on at a time, and the multiplex time per grid is no more than 1ms.

Since dissipation is proportional to current squared, the maximum current that can be delivered for a given multiplex ratio is given by:

$$I_{PEAK} = (\text{grids} \times 1600)^{1/2} \text{ mA}$$

where grids is the number of grids in a multiplexed display.

This means that a duplex application (two grids) can use a repetitive peak current of 56.5mA, a triplex (three grids) application can use a repetitive peak current of 69.2mA, and higher multiplex ratios are limited to 75mA.

Paralleling Outputs

Any number of outputs within the same package may be paralleled in order to raise the current drive or reduce the output resistance. Only parallel outputs directly (by shorting outputs together) if the interface control can be guaranteed to set the outputs to the same level. Although the sink output is relatively weak (typically 750Ω), that resistance is low enough to dissipate 530mW when shorted to an opposite level output at a V_{BB} voltage of only 20V. A safe way to parallel outputs is to use diodes to prevent the outputs from sinking current (Figure 5). Because the diodes also stop the outputs from sinking current from the VFD tube, an external discharge resistor, R, is required. For static tubes, R can be a large value such as 100kΩ. For multiplexed tubes, the value of the resistor can be determined by the load capacitance and timing

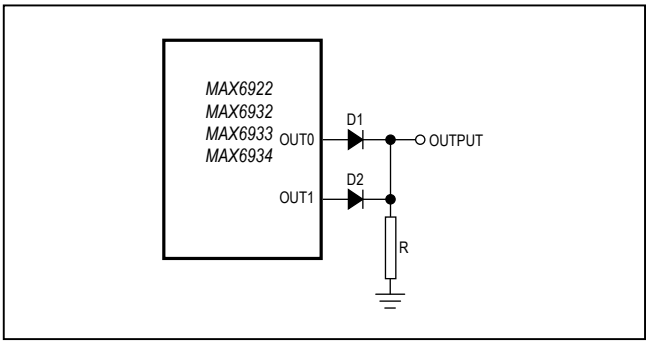

Figure 5. Paralleling Outputs

characteristics required. Resistor R discharges tube capacitance C to 10% of the initial voltage in 2.3 x RC seconds. So, for example, a 15kΩ value for R discharges 100pF tube grid or anode from 40V to 4V in 3.5µs, but draws an additional 2.7mA from the driver when either output is high.

Power Dissipation

Take care to ensure that the maximum package dissipation ratings for the chosen package are not exceeded. Over-dissipation is unlikely to be an issue when driving static tubes, but the peak currents are usually higher for multiplexed tubes. When using multiple driver devices, try to share the average dissipation evenly between the drivers.

Determine the power dissipation (P_D) for the MAX6922/MAX6932/MAX6933/MAX6934 for static tube drivers with the following equation:

$$P_D = (V_{CC} \times I_{CC}) + (V_{BB} \times I_{BB}) + ((V_{BB} - V_H) \times I_{ANODE} \times A))$$

where:

A = number of anodes driven (maximum of 32 with the MAX6922/MAX6934).

I_{ANODE} = maximum anode current.

(V_{BB} - V_H) is the output voltage drop at the given maximum anode current I_{OUT}.

A static tube dissipation example follows:

V_{CC} = 5V ±5%, V_{BB} = 10V to 18V, A = 32, I_{OUT} = 2mA

$$P_D = (5.25V \times 1.5mA) + (18V \times 2.2mA) + ((2.5V \times 2mA/25mA) \times 2mA \times 32) = 60mW$$

Determine the power dissipation (PD) for the MAX6922/MAX6932/MAX6933/MAX6934 for multiplex tube drivers with the following equation:

$$P_D = (V_{CC} \times I_{CC}) + (V_{BB} \times I_{BB}) + ((V_{BB} - V_H) \times I_{ANODE} \times A) + ((V_{BB} - V_H) \times I_{GRID}))$$

where:

A = number of anodes driven.

G = number of grids driven.

I_{ANODE} = maximum anode current.

I_{GRID} = maximum grid current.

The calculation presumes all anodes are on, but only one grid is on. The calculated P_D is the worst case, presuming one digit is always being driven with all its anodes lit. Actual P_D can be estimated by multiplying this P_D figure by the actual tube drive duty cycle, taking into account interdigit blanking and any PWM intensity control.

A multiplexed tube dissipation example follows:

V_{CC} = 5V ±5%, V_{BB} = 36V to 42V, A = 20, G = 12, I_{ANODE} = 0.4mA, I_{GRID} = 24mA

$$P_D = (5.25V \times 1.5mA) + (42V \times 2.2mA) + ((2.5V \times 0.4mA/25mA) \times 0.4mA \times 20) + ((2.5V \times 24mA/25mA) \times 24mA) = 158mW$$

Thus, for a 44-pin PLCC package (T_{JA} = 1/0.0133 = 75.188°C/W from *Absolute Maximum Ratings*), the maximum allowed ambient temperature T_A is given by:

$$T_{J(MAX)} = T_A + (P_D \times T_{JA}) = +150°C = T_A + (0.158 \times 75.188°C/W)$$

So T_A = +138°C.

This means that the driver can be operated in this application with a PLCC package up to the +125°C maximum operating temperature.

Power-Supply Considerations

The MAX6922/MAX6932/MAX6933/MAX6934 operate with multiple power-supply voltages. Bypass the V_{CC}, V_{BB}, and V_{SS} (MAX6932/MAX6933/MAX6934 only) power-supply pins to GND with 0.1µF capacitors close to the device. The MAX6932/MAX6933/MAX6934 may be operated with V_{SS} tied to GND if a negative bias supply is not required. For multiplex applications, it may be necessary to add an additional bulk electrolytic capacitor of 1µF or greater to the V_{BB} supply.

Power-Supply Sequencing

The order of the power-supply sequencing is not important. These ICs are damaged if any combination of V_{CC}, V_{BB}, and V_{SS} is grounded while the other supply or supplies are maintained up to their maximum ratings. However, as with any CMOS device, do not drive the logic inputs if the logic supply V_{CC} is not operational because the input protection diodes clamp the signals.

Cascading Drivers (MAX6922/MAX6932/MAX6934 Only)

Multiple driver ICs may be cascaded, as shown in the *Typical Application Circuit*, by connecting each driver'°s DOUT to DIN of the next drivers. Devices may be cascaded at the full 5MHz CLK speed when V_{CC} ≥ 4.5V. When V_{CC} <4.5V, the longer propagation delay (t_{DO}) limits the maximum cascaded CLK to 4MHz.

Typical Application Circuit

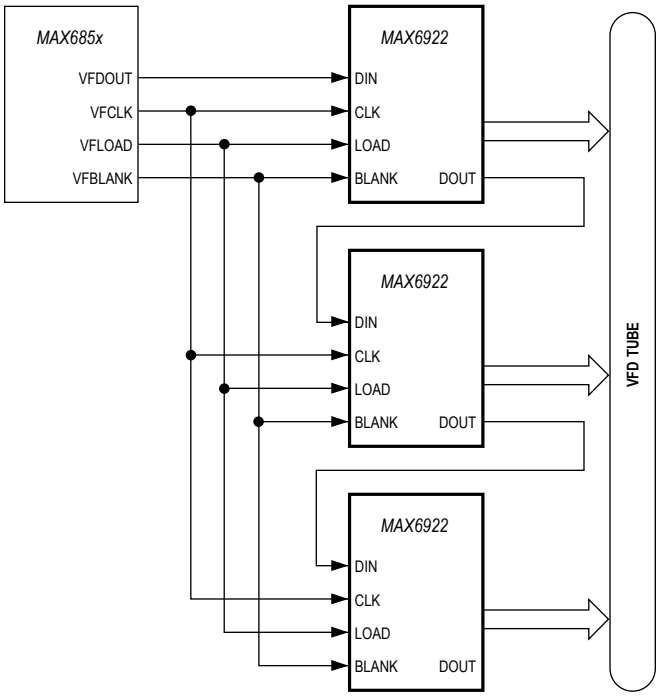

Chip Information

PROCESS: BiCMOS

Pin Configurations

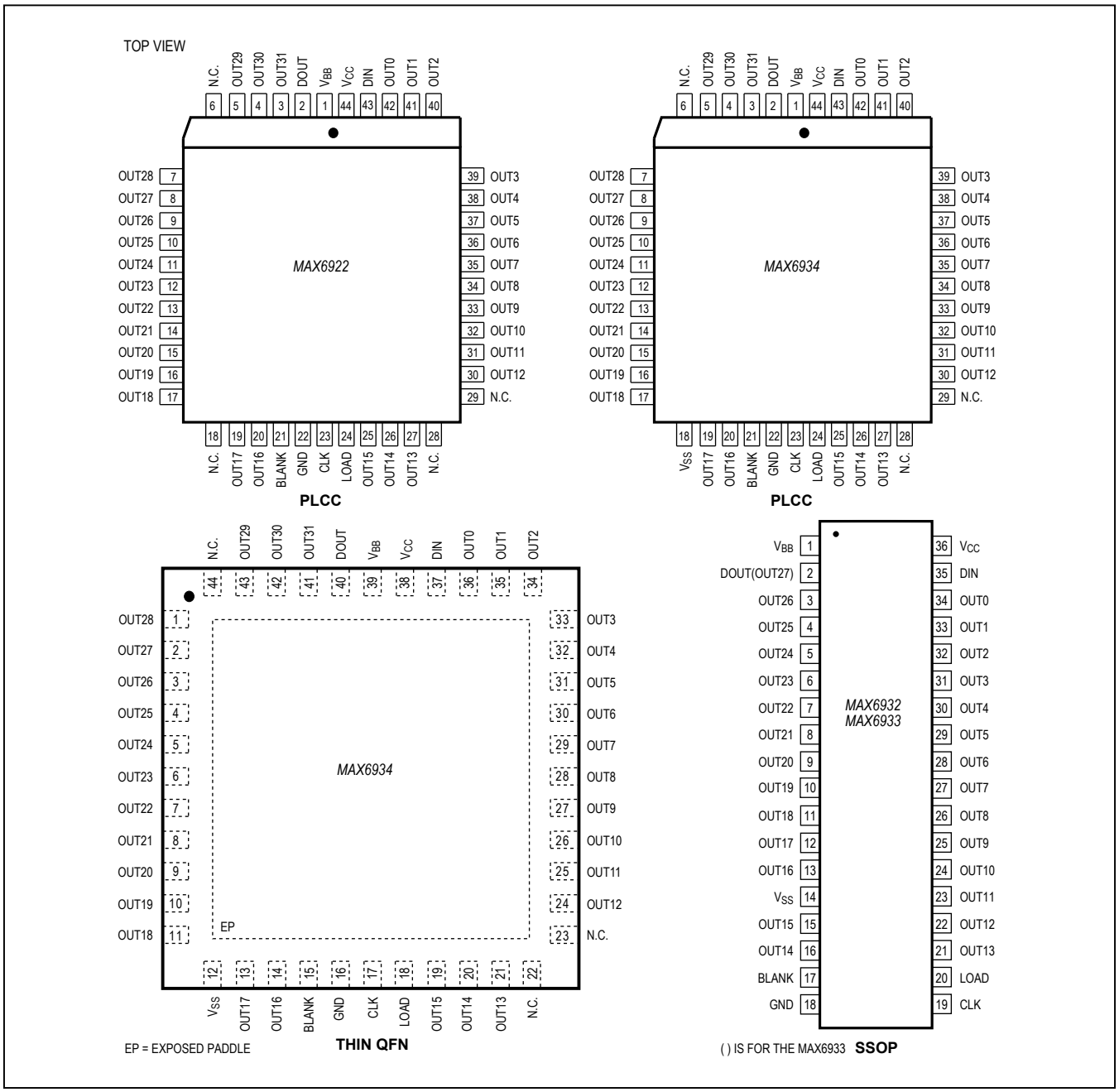

Package Information

For the latest package outline information and land patterns (footprints), go to **www.maximintegrated.com/packages**. Note that a "+", "#", or "-" in the package code indicates RoHS status only. Package drawings may show a different suffix character, but the drawing pertains to the package regardless of RoHS status.

PACKAGE TYPE	PACKAGE CODE	DOCUMENT NO.	LAND PATTERN NO.
36 SSOP	A36-2	21-0040	90-0098
44 PLCC	Q44-1	21-0049	90-0236
44 TQFN-EP	T4477-3	21-0144	90-0128

Revision History

REVISION NUMBER	REVISION DATE	DESCRIPTION	PAGES CHANGED
0	2/04	Initial release	—
1	1/07	Corrected *Pin Description*	6
2	3/07	Updated *Electrical Characteristics*	1, 2, 3, 16
3	7/14	Removed automotive designation and revised *Package Information*	1, 13

For pricing, delivery, and ordering information, please contact Maxim Direct at 1-888-629-4642, or visit Maxim Integrated's website at www.maximintegrated.com.

Maxim Integrated cannot assume responsibility for use of any circuitry other than circuitry entirely embodied in a Maxim Integrated product. No circuit patent licenses are implied. Maxim Integrated reserves the right to change the circuitry and specifications without notice at any time. The parametric values (min and max limits) shown in the Electrical Characteristics table are guaranteed. Other parametric values quoted in this data sheet are provided for guidance.

Maxim Integrated and the Maxim Integrated logo are trademarks of Maxim Integrated Products, Inc. © 2014 Maxim Integrated Products, Inc.

Mouser Electronics

Authorized Distributor

Click to View Pricing, Inventory, Delivery & Lifecycle Information:

Analog Devices Inc.:

MAX6922AQH+D MAX6922AQH+TD